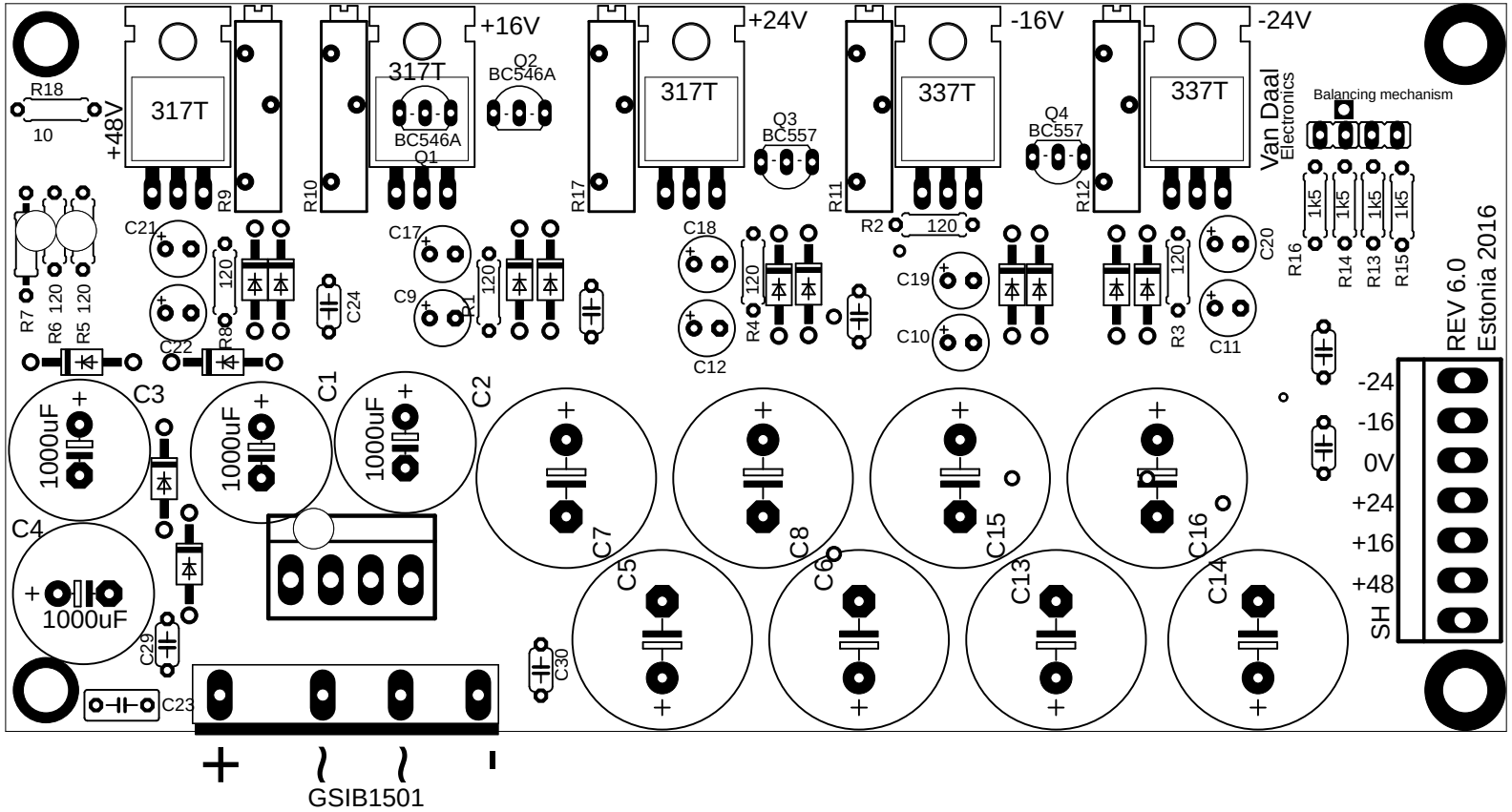
+48V
R18
10
317T
R9
R10
+16V
317T
Q1
BC546A
Q2
BC546A
R17
+24V
317T
Q3
BC557
R11
-16V
337T
Q4
BC557
R12
-24V
337T
Van Daal
Electronics
Balancing mechanism
R16
1k5
R14
1k5
R13
1k5
R15
1k5
REV 6.0
Estonia 2016
SH
-24
-16
0V
+24
+16
+48
R7
R6
120
R5
120
C21
C22
R8
120
C24
C17
C9
R1
120
C18
C12
R4
120
R2
120
C19
C10
R3
120
C20
C11
C3
1000uF
C1
1000uF
C2
1000uF
C4
1000uF
C7
C8
C15
C16
C5
C6
C13
C14
C29
C30
C23
+
~
~
-
GSIB1501